ATMEA1: Highest Safety Reactor Developed jointly by AREVA and Mitsubishi

ANDREAS GOEBEL, ATMEA PRESIDENT AND CEO - DECEMBER 2016

The ATMEA1 reactor is an evolutionary 1200-MWe class pressurized water reactor designed by ATMEA, a joint venture of AREVA and Mitsubishi Heavy Industries Ltd. (MHI). The design process has drawn upon the more than 40-year worldwide PWR experience of AREVA and MHI, which have designed and built more than 130 reactors. Originally developed to meet stringent U.S. safety regulations, ATMEA1 has been reviewed and deemed compliant by safety authorities of France and Canada. Preselected in Turkey, and under consideration in proposed power plant projects in Brazil, Malaysia and Czech Republic, the ATMEA1 reactor benefits today from great commercial prospects throughout the world.

Digital aerial view of two ATMEA1 reactor units

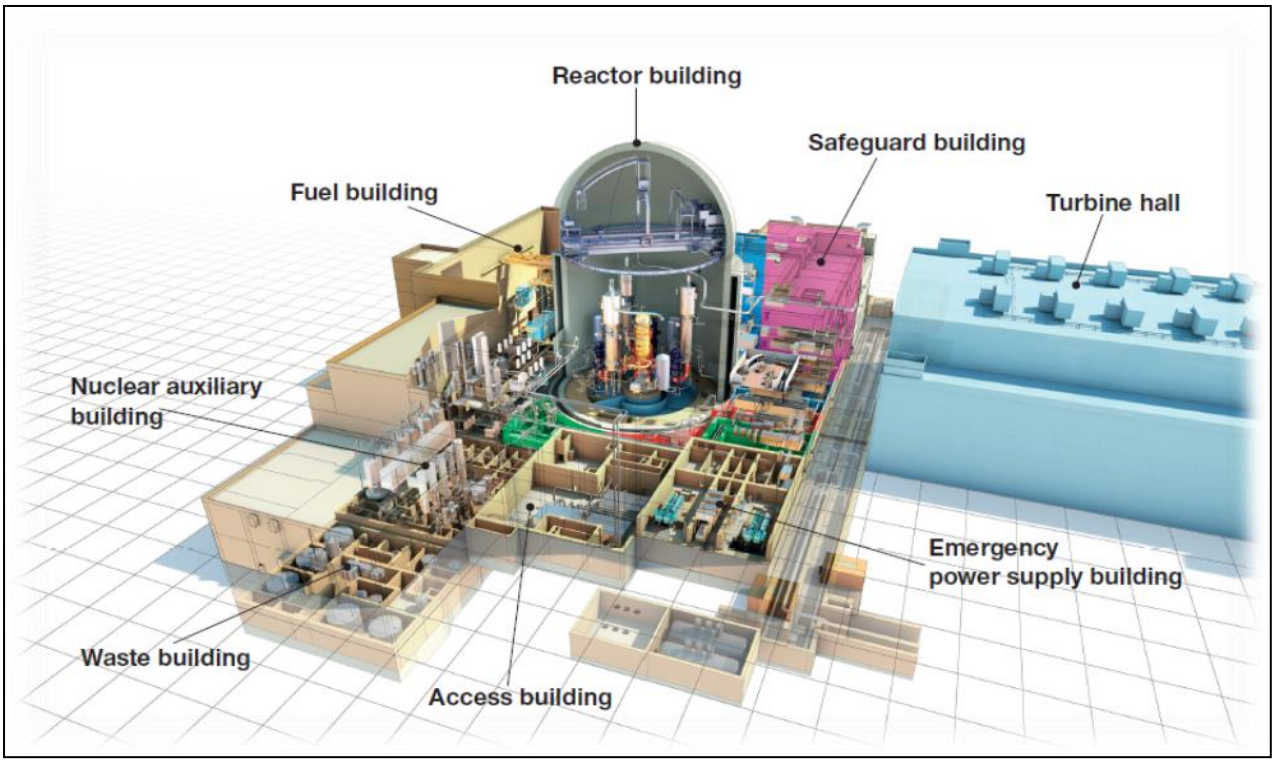

A cutaway view of ATMEA1 reactor and adjacent buildings

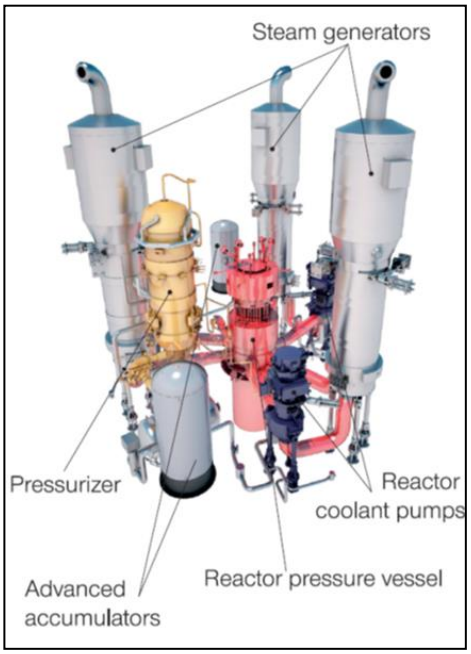

The ATMEA1 reactor's primary system configuration (a third reactor coolant pump is not visible because of the pressurizer)

The ATMEA1 reactor features a 3300-MWth nuclear steam supply system with three coolant loops. The primary system is composed of a reactor vessel that contains fuel assemblies, a pressurizer, and, in each of the three loops, one reactor coolant pump and one steam generator. In each loop, the primary coolant leaving the reactor pressure vessel is directed to a steam generator, and then to a reactor coolant pump, before returning to the reactor pressure vessel. The pressurizer, connected to one of the three loops, keeps the primary pressure constant. The primary system design, configuration, and main components are similar to those of currently operating PWRs. In internal volume, however, ATMEA1 primary components are larger than those used in current three-loop units in order to support steady operation and increase safety margins.

The reactor core consists of 157 fuel assemblies, each with fuel rods arranged in a 17x17 square array, together with 24 control rod guide thimbles. The rods contain pellets of either slightly enriched uranium dioxide or mixed-oxide (MOX) fuel. The contents of an ATMEA1 core can range from all uranium dioxide to as much as one-third MOX for the standard design, and up to 100 percent without any major design modifications. The length of the fuel cycle can be set from 12 to about 24 months.

The ATMEA1 reactor pressure vessel includes improvements over the vessels of existing reactors. Bottom-mounted penetrations for in-core instrumentation have been eliminated, with instrumentation penetrating the ATMEA1 vessel from its top. The number of welds has been reduced, and weld geometry has been improved, so as to simplify the manufacturing process, nondestructive examination, and in-service inspection. Also, the vessel will be made of materials with features such as brittle fracture resistance.

The ATMEA1 steam generators are vertical, allowing steam to circulate naturally. U-tube heat exchangers, as well as integral moisture separating equipment are included. An axial economizer increases steam pressure, leading to improved thermal efficiency. The tube material is alloy 690 TT, widely used in steam generators throughout the world, and highly resistant to primary stress corrosion. Compared to operating plants, the ATMEA1 steam generator's secondary side has a larger water inventory, allowing more time to take action in case of a postulated total loss of secondary water.

Active safety

In the ATMEA1 reactor design, safety is achieved through powerful active systems, with passive systems called upon only for specific actions when it is effective. There is an optimized balance between system diversity and redundancy. The severe accident management systems have been validated through a deterministic approach for beyond-design-basis situations. These ensure that the plant remains safe and under control at all times.

The reactor is designed to have a core damage frequency of less than 10^{-5}/reactor-year, and a large release frequency of less than 10^{-6}/reactor-year. ATMEA1 design complies with U.S. regulations and US industry consensus codes and standards; the International Commission on Radiological Protection's recommendations; and International Atomic Energy Agency safety standards.

Incorporating the experience gained through the developments of AREVA's EPR reactor and MHI's APWR reactor, the safety design of the ATMEA1 reactor is based primarily on deterministic analyses (which strictly apply the defense-in-depth concept), complemented by probabilistic analyses. This results in the followings:

- Favorable plant transient behavior, because of large steam generator inventory and pressurizer volume.
- Simplification of the safety systems, and functional separation.
- Mitigation of common-mode failures through segregation and diverse backup safety functions.
- Low sensitivity to failures, including human errors, through incorporation of adequate design margins.
- Longer times for operators to take actions.
- Less sensitivity to human errors, through optimized digital instrumentation and control systems.
- A robust containment pressure vessel.

For all safety analysis, the long-term safe state is retained as safe shutdown state. Low-probability events with multiple failures and coincident occurrences, up to the total loss of safety-grade systems, are considered in addition to the deterministic design basis. A probabilistic approach is used to define these events, and both deterministic and probabilistic approaches are used to assess the specific measures available to manage the events. As a result, the probability of severe accidents has been greatly reduced in the ATMEA1 design, and innovative features have been implemented to design out early containment failure. In addition, design provisions have been adopted to further reduce the residual risk, to mitigate core melt, and to prevent large releases. The ATMEA1 reactor thus integrates top-level safety features to protect, cool, and confine the reactor in all situations, including extreme conditions.

Protection

An ATMEA1 plant — the reactor building, the safeguard building (including the main control room), the fuel building, and the emergency power supply buildings — is, by design, protected against a wide range of external hazards, including the followings:

- High-level seismic events, with a 0.3g safe shutdown earthquake level as a design standard, and appropriate design margins.
- External flooding, with leak-tight buildings housing safety systems as well as equipment.
- Explosions, missiles, tornadoes, and fire.

The ATMEA1 reactor is also designed to withstand the crash of a military or large commercial airplane, ensuring the prevention of any impact on the environment, and upholding the structural integrity of the reactor building, safeguard building, and fuel building; the prevention of airplane fuel ingress into those same buildings, to prevent internal fires or explosions; safe shutdown capability; and long-term availability of emergency core cooling and residual heat removal systems.

The three main safety trains of the ATMEA1 reactor

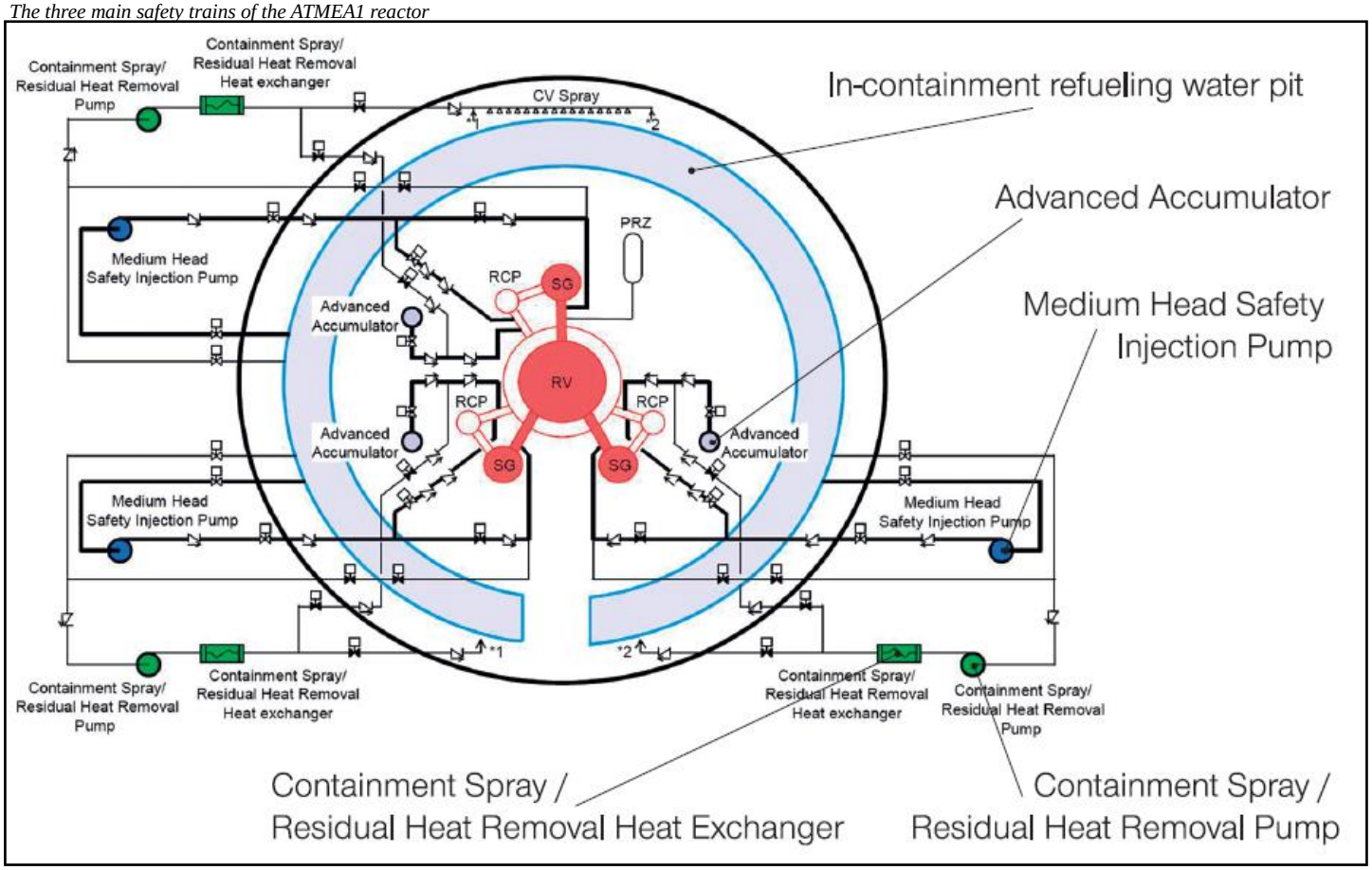

Cooling

The strategy behind the ATMEA1 design calls for the use of robust, protected, and permanently installed equipment and resources to maintain or restore core cooling, containment cooling, and spent fuel cooling for a prolonged period of time in all reactor states. Cooling would be maintained during extreme external events, such as earthquakes and external flooding, beyond those events accounted for in the design basis.

The ATMEA1 design integrates three independent safety trains, which are fitted to each of the three reactor loops. These trains are protected against external hazards. An additional fourth train (Division X) is installed for cooling chain systems, providing both on-power maintenance capability and diversity. Division X cooling chain systems utilize the diversified second ultimate heat sink (UHS2).

Each of the three safety trains boasts the following components:

- *The safety injection system* — This system injects and recirculates emergency cooling water to maintain the reactor core's coolant inventory following a loss-of-coolant accident (LOCA). In case of ruptures or breaches in the primary loops, the loops need to be refilled with water very quickly. The advanced accumulators provide water during the first seconds—before the safety (medium-head) injection pumps start—first at a high flow rate and then at a lower flow rate. As a result, low-head injection pumps are not necessary. The accumulator is a passive system that is self-activated and driven by pressurized gas, and therefore does not require any electrical triggering systems.
- *The containment spray system and the residual heat removal system* — These systems perform normal shutdown cooling as well as containment spray injection to maintain the reactor building conditions within design limits during an event such as a LOCA.
- *Emergency power supply* — Each of the three safeguard divisions and the backup train Division X has an emergency power supply. In addition, there is an alternative AC power source, with sufficient diversity to ensure that power remains available to essential systems (including cooling), even in the event of a station blackout.
- *In-containment refueling water storage pit* — This pit is located at the bottom of the containment and under the reactor pit, and feeds the safety injection, containment spray, and residual heat removal systems. It will also provide for the cooling of the corium in the event of a core melt.
- *Fuel pool cooling* — The spent fuel pool is located outside the reactor building in a dedicated structure, to simplify access for fuel handling during plant operation and the use of fuel casks. Pool cooling is ensured by two redundant, safety-related cooling trains, and in case of a beyond-design-basis accident, an additional heat removal system can be employed.

Because each train of the safety systems is placed in its own separate area or division, each safety system train is protected against the propagation of internal hazards (for example, fire, high-energy pipe break, or flooding) from one train to another.

Confinement

Severe accident mitigation features and systems were incorporated in the early stages of the ATMEA1 design to ensure that in the very unlikely event of a severe accident, the effects are confined within the plant. These systems are designed to achieve the following main safety goals:

- Prevention of high-pressure core melt through the use of decay heat removal systems, complemented by dedicated primary system and depressurization system.
- Molten core spreading and cooling through a spreading area (a core catcher similar to that of AREVA's EPR reactor), which is coated with a protective material and has a cooling system to protect the basemat.
- Prevention of hydrogen detonation through the use of passive catalytic recombiners to reduce hydrogen concentration in the containment.

The reactor's redundant systems

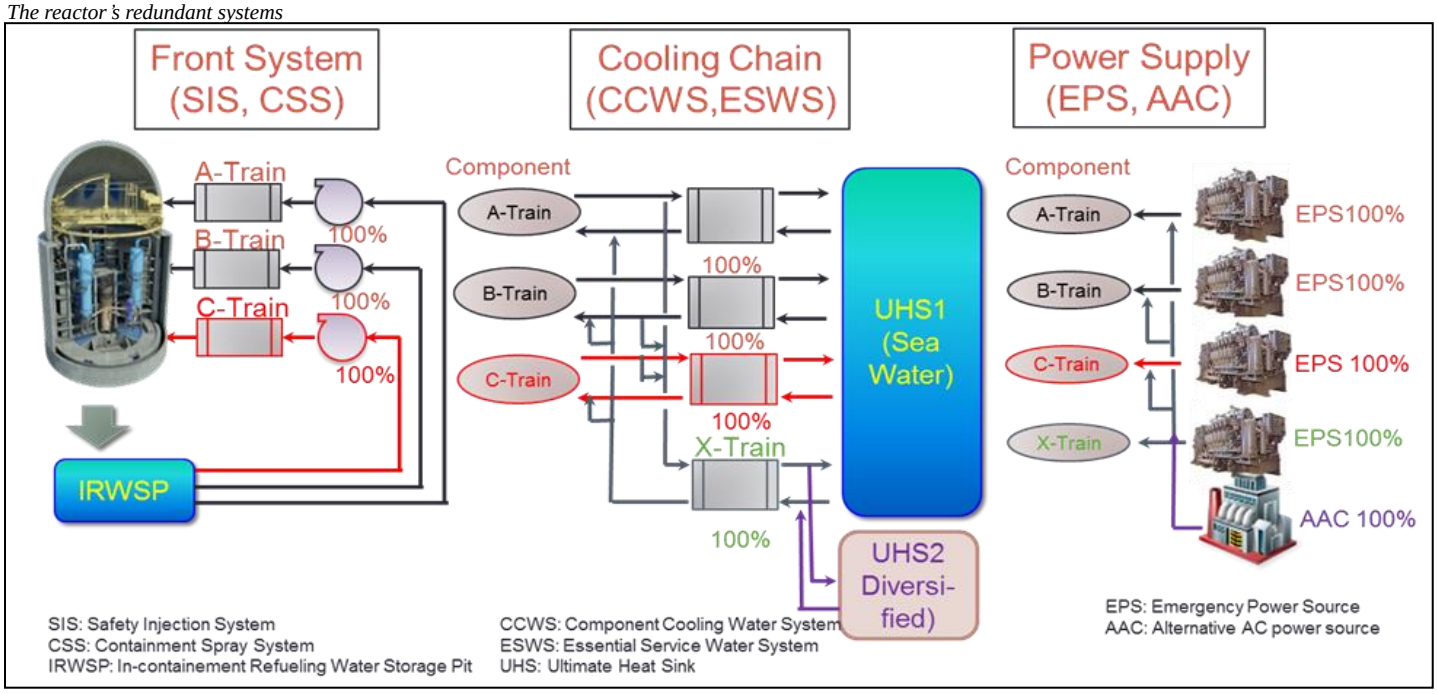

- Control of increases in containment pressure by a dedicated severe accident heat removal system, consisting of a spray system with recirculation of water from the in-containment refueling water pit.
- Long term cooling of the melt by a dedicated severe accident heat removal system, which also recirculates and cools water through the core catcher cooling structure.
- Collection of the output from all leaks, and prevention of confinement bypass through an annulus.

High-performance generation

ATMEA1 reactor is designed for a thermal efficiency of about 37 percent (leading to fuel economy and waste reduction), a 60-year service life, and an availability factor of 92 percent over the life of the plant (through fuel cycles of up to two years, and on-power maintenance). The ATMEA1 reactor also provides load-follow and frequency control capabilities, which allow the ATMEA1 reactor to be adapted to various grid requirements to provide utilities advanced operational flexibility.

Ready for construction

The IAEA completed a review of ATMEA1 conceptual design safety features in 2008 and concluded that the conceptual design was compliant with the IAEA fundamental safety principles and key design and safety assessment requirements. France's Autorité Sûreté Nucléaire (ASN) completed a review of the ATMEA1 reactor commissioned by ATMEA in January 2012. It concluded that ATMEA1 safety options and general design choices satisfactorily met the current French regulatory and quasi-regulatory measures, as well as the 2004 technical guidelines for the design and construction of new-generation PWRs. ASN also praised ATMEA efforts to incorporate early lessons learned from the Fukushima Daiichi nuclear accident.

In June 2013, the Canadian Nuclear Safety Commission (CNSC) completed the Phase 1 Pre-Licensing Review - Assessment of Compliance with CNSC Regulatory Requirements and Canadian Codes and Standards — of the ATMEA1 reactor. It was concluded that ATMEA1 design intent meets the most recent CNSC regulatory design requirements and expectations for a new nuclear power plant in Canada.

In October 2016, the IAEA conducted the first seismic review of a new reactor design and concluded that the ATMEA1 seismic design methodologies are aligned with relevant IAEA Safety Standards.

Preselected in Turkey, and under consideration in proposed power plant projects in Brazil, Malaysia and Czech Republic, the ATMEA1 reactor benefits today from great commercial prospects throughout the world.

*For further information on ATMEA1 design, please visit ATMEA website at <**www.atmea-sas.com**>.*